Honeywell

190 Can Beverage Cooler
User Manual

Read and save these instructions before use

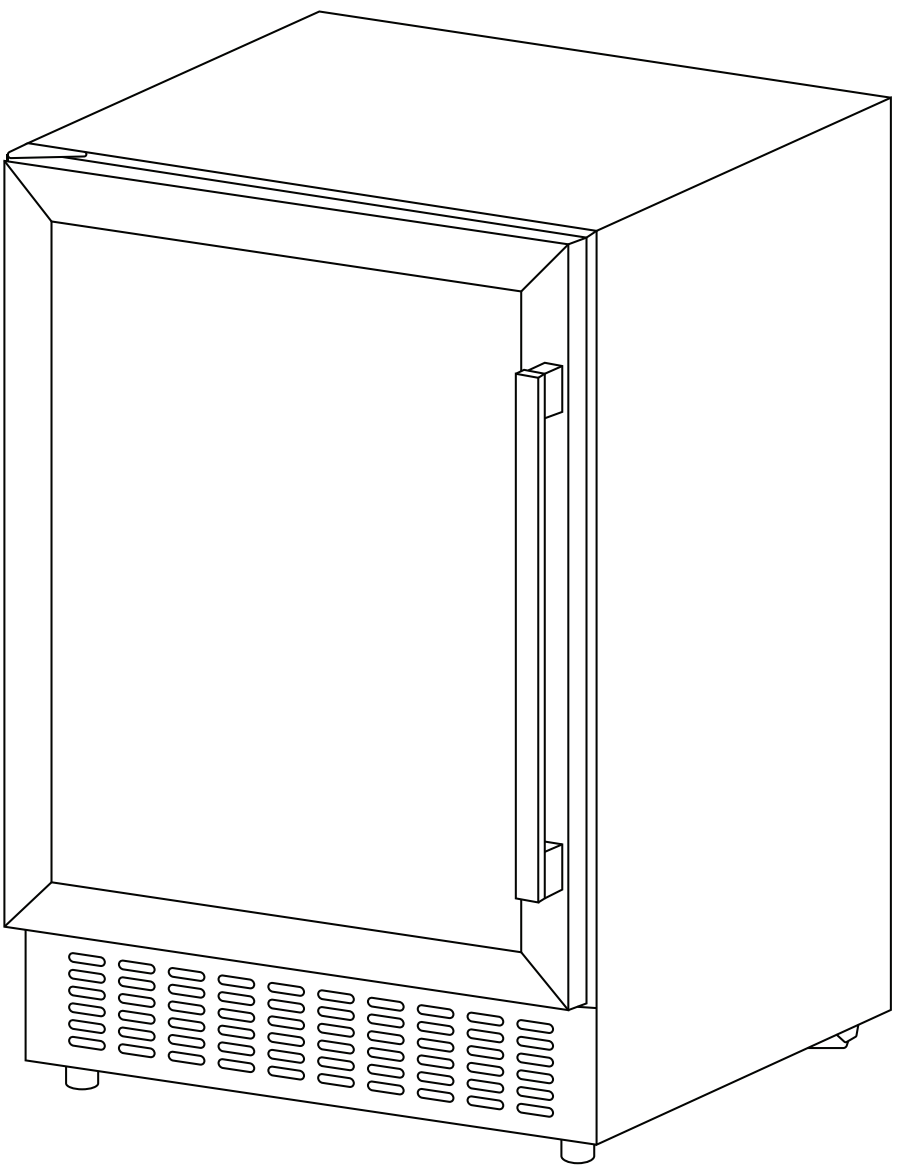

H190BCS

CONTENTS

1 Safety Warnings

1.1 Danger. 1-3

1.2 Warning 3-4

2 Product Diagram 5

3 Installation Instructions

3.1 Before Using Your Beverage Cooler 6

3.2 To Install Your Stainless Steel Handle 6

3.3 To Install Your Beverage Cooler 7-8

4 Operation Instructions

4.1 Controls. 9

4.2 Control Panel 9

4.3 Storage 9

4.4 Door Lock 9

4.5 Shelves 10

5 Care & Maintenance

5.1 Cleaning Your Beverage Cooler 11

5.2 Power Failure. 11

5.3 Vacation Time 11

5.4 Moving Your Beverage Cooler. 11

5.5 Energy Saving Tips 12

6 Troubleshooting 13-14

1 SAFETY WARNINGS

Your safety and the safety of others are very important.

This beverage cooler complies with the applicable safety requirements and is safe for daily use. However, basic safety precautions should always be followed when using an electrical appliance, to reduce the risk of fire, electric shock, and personal injury.

1.1 Danger



Plug into its own individual electrical outlet with a voltage rating that matches the rating label on the cooler (115V/60Hz). Use receptacles that cannot be turned off by a switch or pull chain. Be sure that the plug is fully inserted into the receptacle.

Plug into a grounded 3-prong outlet. Do not under any circumstances cut or remove the third ground prong from the power cord supplied.

To protect against electric shock, do not immerse the beverage cooler, plug or cord in water or other liquids.

Never unplug the cooler by pulling the power cord. To disconnect the beverage cooler, always grip the plug firmly and pull straight out from the wall outlet.

Repair or replace immediately all power cords that have become frayed or otherwise damaged. Do not use a cord that shows cracks or abrasion damage along its length or at either end.

Do not connect or disconnect the electric plug when your hands are wet. Do not operate the cooler with wet hands, while standing on a wet surface or while standing in water.

Unplug the beverage cooler or disconnect power before cleaning or servicing. Failure to do so can result in electrical shock or death.

When moving the beverage cooler, be careful not to roll over or damage the power cord.

Never clean beverage cooler parts with flammable fluids. These fumes can create a fire hazard or explosion. And do not store or use gasoline or other flammable vapor and liquids in the vicinity of this or any other appliance. The fumes can create a fire hazard or explosion.

Do not attempt to repair or replace any part of your beverage cooler unless it is specifically recommended in this manual. All other servicing should be referred to a qualified technician.

An empty beverage cooler can be dangerous to children. Remove any latches, lids, locks, and/or doors from unused or discarded beverage coolers to prevent child entrapment and suffocation. Never allow children to operate, play with or crawl inside this beverage cooler.

01 This appliance is not intended for use by persons (including children) with reduced physical, sensory or mental capabilities, or lack of experience and knowledge, unless they have been given supervision or instruction concerning use of the appliance by a person responsible for their safety.

02 Children should be supervised to ensure that they do not play with the appliance.

03 This appliance can be used by children aged from 8 years and above and persons with reduced physical, sensory or mental capabilities or lack of experience and knowledge if they have been given supervision or instruction concerning use of the appliance in a safe way and understand the hazards involved. Children shall not play with the appliance. Cleaning and user maintenance shall not be made by children without supervision.

04 If the supply cord is damaged, it must be replaced by the manufacturer, its service agent or similarly qualified persons in order to avoid a hazard.

05 To avoid a hazard due to instability of the appliance, it must be fixed in accordance with the instructions.

06 When positioning the appliance, ensure the supply cord is not trapped or damaged.

07 Do not locate multiple portable socket-outlets or portable power supplies at the rear of the appliance.

08 Keep ventilation openings, in the appliance enclosure or in the built-in structure, clear of obstruction

09 Do not use mechanical devices or other means to accelerate the defrosting process, other than those recommended by the manufacturer.

10 Do not damage the refrigerant circuit.

11 Do not use electrical appliances inside the drink storage compartments of the appliance, unless they are of the type recommended by the manufacturer.

12 Do not store explosive substances such as aerosol cans with a flammable propellant in this appliance.

13 This appliance is intended to be used in household and similar applications such as:

- Staff kitchen areas in shops, offices and other working environments.
- Farm houses and by clients in hotels, motels and other residential type environments.
- Bed and breakfast type environments.
- Catering and similar non-retail applications.

14 To avoid contamination of drink, please respect the following instructions:

- Opening the door for long periods can cause a significant increase of the temperature in the compartments of the appliance.
- Clean regularly surfaces that can come in contact with drink and accessible drainage systems.
- Clean water tanks if they have not been used for 48 h, flush the water system connected to a water supply if water has not been drawn for 5 days.
- If the refrigerating appliance is left empty for long periods, switch off, defrost, clean, dry, and leave the door open to prevent mould developing within the appliance.



WARNING: risk of fire / flammable materials

The coolant circuit of this unit contains the refrigerant lsobutane (R600a),a natural gas that-is flammable and of high environmental compatibility. Make sure no parts of the coolant circuit get damaged-during transport and installation of the appliance.

1.2 Warning

Do not use this beverage cooler for other than its intended purpose.

Move this beverage cooler by 2 people. Failure to do so can result in injury.

Place this beverage cooler in a well-ventilated area with temperatures above 15°C (60°F) and below 32°C (90°F).

To ensure proper ventilation for your beverage cooler, the front of the cooler must be completely unobstructed.

This beverage cooler must be installed in an area away from wind, rain, water spray or drips.

The beverage cooler should not be located next to ovens, grills or other sources of high heat.

Do not kink or pinch the power supply cord of beverage cooler.

It is important for the beverage cooler to be leveled in order to work properly. You may need to make several adjustments to level it.

This beverage cooler is designed for storing and cooling beverages. Do not store perishable food or medical products inside the cooler.

When disposing of refrigeration beverage coolers, special handling is often required. It is the consumer's responsibility to comply with federal and local regulations when disposing of this product.

WARNING: Risk of child entrapment and suffocation. Before you throw away this or an old cooler, remove the door. Leave the shelves in place, so that children may not easily climb inside.

DANGER: Risk of fire or explosion. Flammable refrigerant used.

DO NOT use mechanical devices to defrost refrigerator. **DO NOT** puncture refrigerant tubing.

DANGER: Risk of fire or explosion. Flammable refrigerant used. To be repaired only by trained service personnel. **DO NOT** puncture refrigerant tubing.

CAUTION: Risk of fire or explosion. Flammable refrigerant used. Consult repair manual / owner's guide before attempting to service this product. All safety precautions must be followed.

CAUTION: Risk of fire or explosion. Dispose of property in accordance with federal or local regulations. Flammable refrigerant used.

CAUTION: Risk of fire or explosion due to puncture of refrigerant tubing. Follow handling instructions carefully. Flammable refrigerant used.

CAUTION: To prevent a child from being entrapped, keep out of reach of children and not in the vicinity of the cooler.

2 PRODUCT DIAGRAM

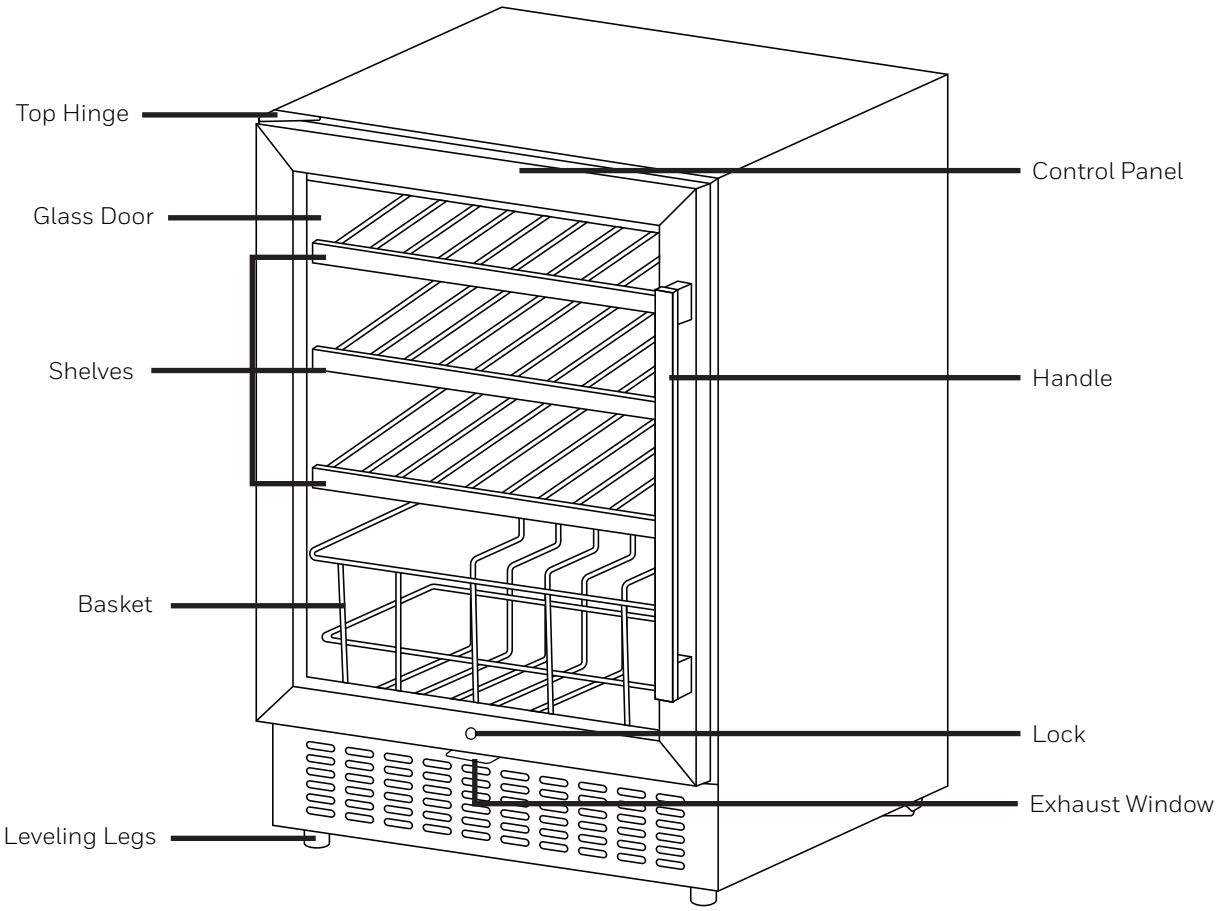

3 INSTALLATION INSTRUCTIONS

3.1 Before Using Your Beverage Cooler

Remove the exterior and interior packaging.

Check to be sure you have all of the following parts:

- 3 Metal Shelves

- 2 Keys

- Stainless Steel Handle

- Instruction Manual

IMPORTANT: Before connecting this beverage cooler to a power source, let it stand upright for approximately 24 hours. This will reduce the possibility of a malfunction in the cooling system from handling during transportation.

Clean the interior surface with lukewarm water using a soft cloth.

Install the handle on the left side of the door.

3.2 To Install Stainless Steel Handle

01 Pull away the door gasket in the area where the handle is to be installed, as Illustration #1. The gasket is easily removed by hand, no tools are necessary.

02 Align the handle with the pre-installed screws on the door frame. Tighten the screws with a screwdriver until the handles secure tightly against the door frame, as Illustration #2. (Do NOT over tighten as this will cause damage to the handle assembly).

03 3) Replace the door gasket to its original position.

Illustration #1

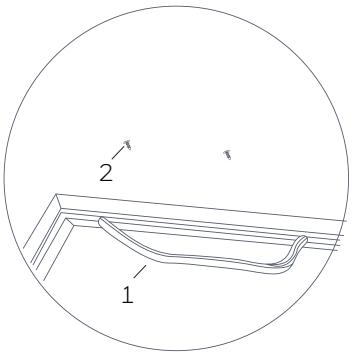

Illustration #2

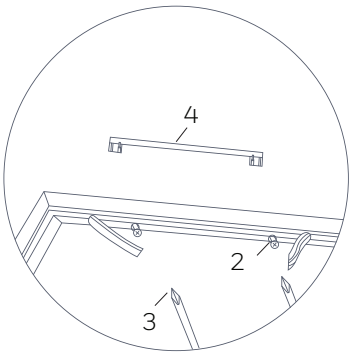

1. Gasket
2. Screw
3. Phillips Head Screwdriver
4. Handle

3.3 To Install Your Beverage Cooler

- This Beverage cooler is designed for free standing or built-in (fully recessed) installation.
- Place your Beverage cooler on a solid and level floor that is strong enough to support it when it is fully loaded. This will ensure a vibration-free and noise-free operation. Adjust the leveling legs in and out to stabilize the cooler horizontally. If the legs are not properly adjusted, the cooler may be unstable and result in excess noise or vibration.
- Locate the Beverage cooler away from direct sunlight and sources of heat (stove, heater, radiator, etc.). Direct sunlight may affect the acrylic coating and heat sources may increase electrical consumption. Extremely cold ambient temperatures may also cause the cooler not to perform properly.
- It is not advisable to install this cooler in moist areas or directly adjacent to a kitchen sink, as moisture could cause premature corrosion to the components of your new cooler.
- It is recommended you install the Beverage cooler in a place with temperatures above 60°F (15°C) and below 90°F (32°C), and humidity is under 60%. If the ambient temperature is above or below recommended temperatures, the performance of the cooler may be affected. Placing your cooler in extremely cold or hot conditions may cause interior temperatures to fluctuate, and the temperature range of 3°C-18°C (37°F-65°F) may not be reached.
- Connect the Beverage cooler to an exclusive, properly grounded, standard electrical supply (115V/60 Hz), in accordance with the National Electrical Code and local codes and ordinances. Any questions concerning power and/or grounding should be directed toward a certified electrician or an authorized products service center

WARNING: Improper use of the grounded plug can result in the risk of electrical shock. If the power cord is damaged, have it replaced by an authorized service center.

- The Beverage cooler should always be plugged into its own individual electrical outlet which has a voltage rating that matches the rating label on the Beverage cooler. This provides the best performance and also prevents overloading house wiring circuits that could cause a fire hazard from overheated.
- Do not under any circumstances cut or remove the third ground prong from the power cord supplied.
- Do not use an extension cord or adapter plug. However, if you must use an extension cord, it is absolutely necessary that it be a UL-listed, 3-wire grounding type Beverage cooler extension cord having a grounding type plug and outlet and that the electrical rating of the cord is 10 amperes (minimum) and 115 volts.

- Do not use a cord that shows cracks or abrasion damage along its length or at either end.
- If the Beverage cooler is going to be used in an area that is prone to power surges/outages, it is suggested that you use a power surge protector. The surge protector that you select must have a surge block high enough to protect the Beverage cooler it is connected to. Damages due to power surges are not considered a manufacturer covered defect and will void your product warranty.

4 OPERATION INSTRUCTIONS

4.1 Controls

After plugging the beverage cooler into a wall outlet, the cooler would turn on automatically and the LED screen would show the temperature inside of the cooler.

After setting your desired serving temperature, allow the cooler to cool down for 3 to 4 hours before placing beverage bottles in the beverage cooler.

4.2 Control Panel

Temperature setting range: 3-18ºC (37-65ºF)

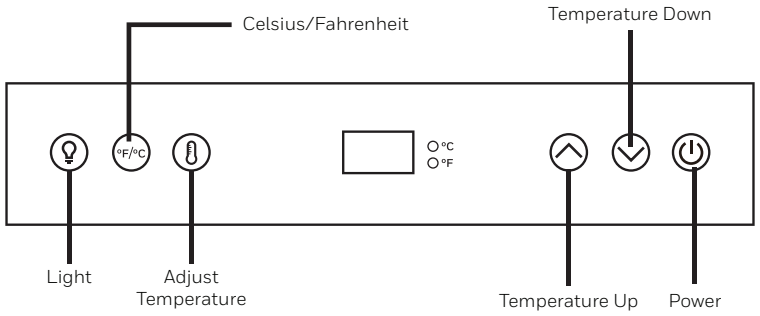

Press ⏻ once to turn ON the cooler. Press and hold about 3 seconds to turn OFF the cooler.

Adjusts the temperature in 1 degree increments.

Adjusts the temperature in 1 degree decrements.

Press 🌡 to begin adjusting the temperature.

°F/°C Toggles the temperature display between Celsius and Fahrenheit.

Turns the interior light on or off.

4.3 Storage

Many cans and bottles may differ in size and dimensions. As such the actual number of bottles you may be able to store may vary.

4.4 Door Lock

This cooler can be secured with a lock and key. The keys are located inside the plastic bag that contains the Instruction Manual. Insert the key into the lock and turn it clockwise to lock the door, making sure the metal pin is engaged completely. To unlock the door, do the reverse. Remove the key and put it in a secure location.

4.5 Shelves

To remove the shelves from the track, pull each shelf out to the shelf post,as shown in figure A. Lift it up again, then slowly pull the shelf out, as shown in figure B.

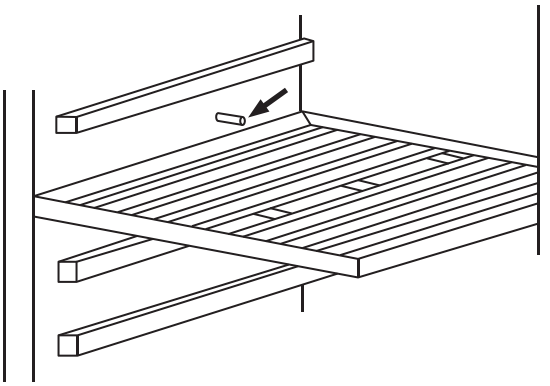

Figure A

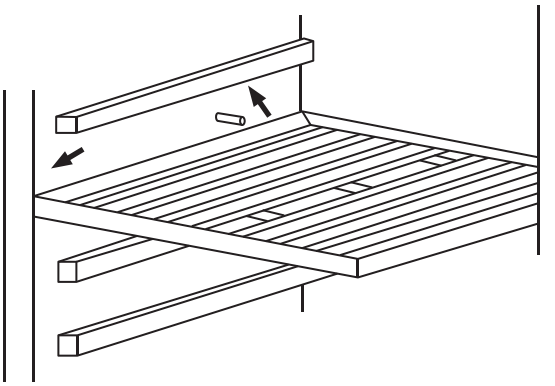

Figure B

5 CARE & MAINTENANCE

5.1 Cleaning Your Beverage Cooler

IMPORTANT: Always unplug the cooler before cleaning or performing maintenance. Never use harsh cleansers or scouring pads to clean any part of the cooler.

01 Turn off the power, unplug the beverage cooler, and remove all items including shelves.

02 Wash the inside surfaces with warm water and baking soda solution. The solution should be about 2 tablespoons of baking soda to a quart of water.

03 Wash the shelves with a mild detergent solution.

04 Wring excess water out of the sponge or cloth when cleaning the area near the controls, or any electrical parts.

05 Wash the outside cabinet with warm water and a mild liquid detergent. Rinse well and wipe dry with a clean soft cloth. Do not use steel wool or steel brush to rub the stainless steel, which will contaminate the stainless steel with steel particles and rusting may occur.

5.2 Power Failure

Most power failures are corrected within a few hours and should not affect the temperature of your beverage cooler. If the power is off for an extended period of time, proper steps should be taken to protect your contents.

5.3 Vacation Time

Leave the beverage cooler operating during vacations of less than three weeks. For periods longer than this, turn the beverage cooler off and leave the door slightly ajar to prevent odor from building inside the beverage cooler.

5.4 Moving Your Beverage Cooler

- Remove all items (bottles) from the cooler.
- Securely tape down any loose items, such as shelves, inside the cooler.
- Turn the adjustable leg up to the base to avoid damage.
- Tape the door shut.
- Ensure that the beverage cooler stays securely in the upright position during transportation. Protect the outside of the beverage cooler with a blanket or a similar item.

5.5 Energy Saving Tips

- The cooler should be located in the coolest area of the room away from heat sources or direct sunlight.
- Ensure that the cooler is adequately ventilated. Never cover air vents.
- Only open the cooler door for as long as necessary. Frequent opening of the door will affect internal temperature.

6 TROUBLESHOOTING

The following simple issues can be handled by the user. Please call the after-sale service department if the issues are not settled.

Inoperation	Check whether the cooler is connected to power Check if there is low voltage. Check if weather control knob is in the work area. Check whether there is a power failure or partial circuits have tripped.	Plug the unit. Press to turn on the unit. Check the breaker and/or fuses.
Cooler Is Not Cold Enough.	External environment may require a higher setting. The door is opened too often. The door is not closed completely. The door gasket does not seal properly.	Long operation of the cooler is normal in summer when the ambient temperature is high. Do not put too many beverages in the cooler at one time. The doors are opened too frequently.
The compressor turns on and off frequently.	The room temperature is hotter than normal. A large amount of contents has been added to the chiller. The door is opened too often. The door is not closed completely. The temperature control is not set correctly. The door gasket does not seal properly.	Close the door properly. Check the door gasket.
The fans turn on and off frequently.	In order to circulate the air and maintain the set temperature inside the cabinet the fans must cycle on and off even when the compressor is off. The fans will cycle ON and OFF while the compressor is off approximately every 10 seconds, this is called “Semi-speed status”. This cycle is normal and meant both to circulate the air as well as ensure the continued operational status of the fans. If the fan stops completely and does not complete this cycle the fan is non-operational.	
The light does not work.	Not plugged in. The circuit breaker tripped or a blown fuse. The light button is “OFF”.	Plug the unit. Check the breaker and/or fuses.
Vibrations.	The chiller is not leveled The bottles are vibrating. There is an object under the chiller.	Check to assure that the chiller is level. Make sure the bottles don’t touch each other. Remove the object.
The cooler seems to make too much noise.	The cooler is not level.	Level the cooler. The rattling noise may come from the flow of the refrigerant, which is normal. As each cycle ends, you may hear gurgling sounds caused by the flow of refrigerant in your chiller. Contraction and expansion of the inside walls may cause popping and crackling noises.
The door will not close properly.	The cooler is not level. The door was reversed and not properly installed. The gasket is dirty. The shelves are out of position.	Check to assure that the cooler is level. Make sure the bottles don’t touch each other. Remove the object.

Moisture build up on interior or exterior of the cooler.	This is normal during high humidity periods. This is normal in high temperature environment. Prolonged or frequent door openings. The door does not seal completely.	Lower the room humidity. Move the cooler to a cooler place, and avoid heat and sunlight. Open the door less often. Check door gaskets for proper seal.
Error Code: E1	Temperature sensor failure.	Contact us for a service call.



LIMITED WARRANTY

Models included are:
H101TFS, H16MRB, H16MRS, H33MRB, H33MRS, H31MRS, H31MRB, H11MFW, H11MFB, H11MFS, H17UFW, H17UFS, H35CFW, H5CFW, H7CFW, H14WCB, H24WCB, H34WCB, H52WCS, H48BCS, H115BCS, H4MFSS, HDS18SS, HDS24SS, HCTDS1W, HCTDS2W, HAC5, HAC5-B, HAC6, HAC6-B, HAC8, HAC8-B, HAC10, HAC10-B, HAC12, HAC12-B, HAC14, HAC12-B, HAC-U8, HAC-U8-B, HAC-U10, HAC-U10-B, HAC-U12-W, HAC-U12-B, H3UFW, H3UFB, H3UFS, HAC-8I, H7WCS, H36WCS, H46WCS, H56WCS, H154WCS, H165WCS, H174WCS, H186WCS, H46WCS1, H7WCS-B, H36WCS-B, H46WCS-B, H46WCS-1B, H56WCS-B, H154WCS-B, H165WCS-B, H174WCS-B, H186WCS-B, H142BCS, H24BWCS

Products listed above are covered by the terms of this Limited Warranty. For purposes of this Limited Warranty,

the term “product” means any appliance manufactured for BHRS Group. BHRS Group warrants that it will, at BHRS Group’s option, replace or repair the Purchaser’s BHRS Group product sold in the U.S. or Canada by an authorized retailer if that product is defective due to faulty workmanship or materials, subject to the limitations described in this Limited Warranty. BHRS Group undertakes no responsibility for the quality of the goods except as otherwise provided in this warranty. There are no warranties that extend beyond the description on the face hereof. This Limited Warranty is valid only in connection with the original purchase of new products from authorized retailers and extends from the original purchase date of the original product purchased. This warranty extends only to the original purchaser of the product and lasts for one (1) year from the date of the original purchase or until the original purchaser of the product sells or transfers the product, whichever fi st occurs. An “original purchaser,” for the purposes of this Limited Warranty, is an individual or entity who purchases the product directly from BHRS Group or an authorized retailer of BHRS Group with the intent to use the product for personal consumer use and commercial or industrial use and not with the intent to resell the product. An “authorized retailer,” for purposes of this Limited Warranty, is an individual or entity authorized by BHRS Group to sell the product directly to original purchasers.

An individual or entity that purchases the product from whatever source with the intent to resell the product is an unauthorized reseller (“unauthorized reseller”). For the purpose of this Limited Warranty a “Third Party” would be considered any plumber, maintenance company, or individual hired by the Purchaser.

This Limited Warranty does not apply to used, refurbished, renewed, floor model or “demo” products, or to products sold by unauthorized resellers, including without limitation, unauthorized resellers on third party websites, including, without limitation, Craigslist, eBay, Amazon, etc. Unauthorized resellers are not “original purchasers” for the purpose of this Limited Warranty. If the purchaser is not the original purchaser of this product, the purchaser takes the product “AS IS,” “with all faults” and without warranty. BHRS Group reserves the right to require a valid serial number located on your product to submit a valid claim under this Limited Warranty. Products where the serial number has been removed or evidence showing the removal or attempted removal of the serial number label will not be eligible to make a claim under this Limited Warranty. IF THE PURCHASE OF THIS PRODUCT WAS NOT DIRECTLY FROM BHRS GROUP, PROOF OF PURCHASE WILL BE REQUIRED TO DEMONSTRATE THAT PURCHASER IS THE ORIGINAL PURCHASER AND THE PRODUCT WAS PURCHASED FROM AN AUTHORIZED RETAILER, AND ELIGIBLE TO MAKE A VALID CLAIM UNDER THIS LIMITED WARRANTY. Your purchase date is established from the date of your sales receipt. BHRS Group may require the purchaser to provide proof of the quality and condition of the appliance if the purchaser makes a claim under this Limited Warranty. BHRS Group reserves the right to invalidate this Limited Warranty if the appliance is determined, in BHRS Group’s reasonable discretion, to be inadequate or if the appliance is found to be in an unsanitary condition. This warranty does not apply if the product was damaged or failed because of accident, improper handling or operation, relocation, abuse, misuse, unauthorized repairs made or attempted, or improper installation or maintenance. Under this Limited Warranty, products are required to be plugged directly into a grounded wall outlet. Plugging a product into an extension cord or surge protector will be considered misuse and will void this Limited Warranty. If damage to the product has occurred during shipping, the damage must be reported to BHRS Group within the first 30 days from the original purchase date to be eligible to make a claim under the Limited Warranty. Shipping damage reported to BHRS Group outside of the fi st 30 days from the original purchase date will not be eligible for a valid

claim under this Limited Warranty. This warranty does not cover shipping costs for the return of products to BHRS Group for repair or replacement.

To submit a valid claim under this Limited Warranty, troubleshooting the product with a BHRS Group Customer Success Expert is required. If troubleshooting the product is refused by the Purchaser, BHRS Group reserves the right to deny the Limited Warranty Claim. In the event a part is necessary to correct the problem with a Product, BHRS Group will provide the part at no cost to the original purchaser under this Limited Warranty. Replacing parts or attempting to correct an issue with the Product is required prior to submitting a claim for a replacement product under this Limited Warranty. Instructions for troubleshooting a Product or replacing a part will be provided by BHRS Group. Troubleshooting, repairs, part replacement, installation, and proper maintenance are the responsibility of the Purchaser. Instructions for proper installation and maintenance will be provided in the user manual.

Installation, maintenance, or repairs of the Product is the responsibility of the Purchaser. The Purchaser reserves the right to use a Third Party for installation, maintenance, and repair at their own risk. BHRS Group is not responsible for any additional cost incurred for installation, maintenance, or repair of the Product including but not limited to additional material needed for installation or the cost of a Third Party. Damage or failure of the Product due to improper installation, maintenance, or repair caused by a Third Party or the Purchaser is not the responsibility of BHRS Group and will not be covered under this Limited Warranty. Instructions for proper installation and maintenance will be provided in the user manual.

ANY AND ALL WARRANTIES, EXPRESSED OR IMPLIED (INCLUDING, WITHOUT LIMITATION, ANY IMPLIED WARRANTY OF MERCHANTABILITY), LAST ONE YEAR FROM THE DATE OF ORIGINAL PURCHASE OR UNTIL THE ORIGINAL PURCHASER OF THE PRODUCT SELLS OR TRANSFERS THE PRODUCT, WHICHEVER FIRST OCCURS. IN NO EVENT SHALL BHRS GROUP'S LIABILITY UNDER ANY EXPRESS OR IMPLIED WARRANTY INCLUDE (I) INCIDENTAL OR CONSEQUENTIAL DAMAGES FROM ANY CAUSE WHATSOEVER, INCLUDING BUT NOT LIMITED TO ELECTRICAL OR WATER DAMAGE, OR (II) REPLACEMENT OR REPAIR OF ANY HOUSE FUSES, CIRCUIT BREAKERS OR RECEPTACLES. NOTWITHSTANDING ANYTHING TO THE CONTRARY, IN NO EVENT SHALL BHRS GROUP'S LIABILITY UNDER ANY EXPRESS OR IMPLIED WARRANTY EXCEED THE PURCHASE PRICE OF THE PRODUCT AND ANY SUCH LIABILITY SHALL TERMINATE UPON THE EXPIRATION OF THE WARRANTY PERIOD.

Except as otherwise provided, BHRS Group will not charge Original Purchaser to repair or replace the purchaser's Product if it is deemed defective during the length of this Limited Warranty, but any transportation costs associated with repairs or replacements are Purchaser's responsibility. No new warranty is provided with a replacement product. The warranty for the replacement product runs from the date of the original purchase of the original product. In the event that repair is necessary, such repair will be at no charge to the Purchaser except for transportation costs associated with such repair or replacement of a product in compliance with the terms of this Limited Warranty.

In the event, a warranty claim is filed and a warranty replacement is deemed necessary, the purchaser will be required to surrender the original product to BHRS Group at the time of replacement. Some states and provinces do not allow limitations on how long an implied warranty lasts or the exclusion or limitation of incidental or consequential damages, so these exclusions or limitations may not apply to you. This warranty gives you specific legal rights. You may also have other rights which vary from state to state and province to province.

If you want to return or replace the product, please contact the store where it was purchased (remember to bring the purchase invoice). If your product needs repair, please contact us via email or phone.

If you want to return or replace the product, please contact the store where it was purchased (remember to bring the purchase invoice). If your product needs repair, please contact us via email or phone.

BHRS Group, LLC
585 Prospect St.
Lakewood, NJ 08701

Customer Service Tel: 1-888-604-0295
Customer Service Email: support@honeywellcoolingappliances.com
Website: honeywellcoolingappliances.com

©2026 BHRS Group, LLC. All Rights Reserved.

The Honeywell Trademark is used under license from Honeywell International Inc. Honeywell International Inc. makes no representations or warranties with respect to this product. This product is manufactured by BHRS Group, LLC.

MADE IN CHINA

Honeywell